" If You Want To Manage It, Measure It "

IOTAFLOW
SYSTEMS PVT. LTD

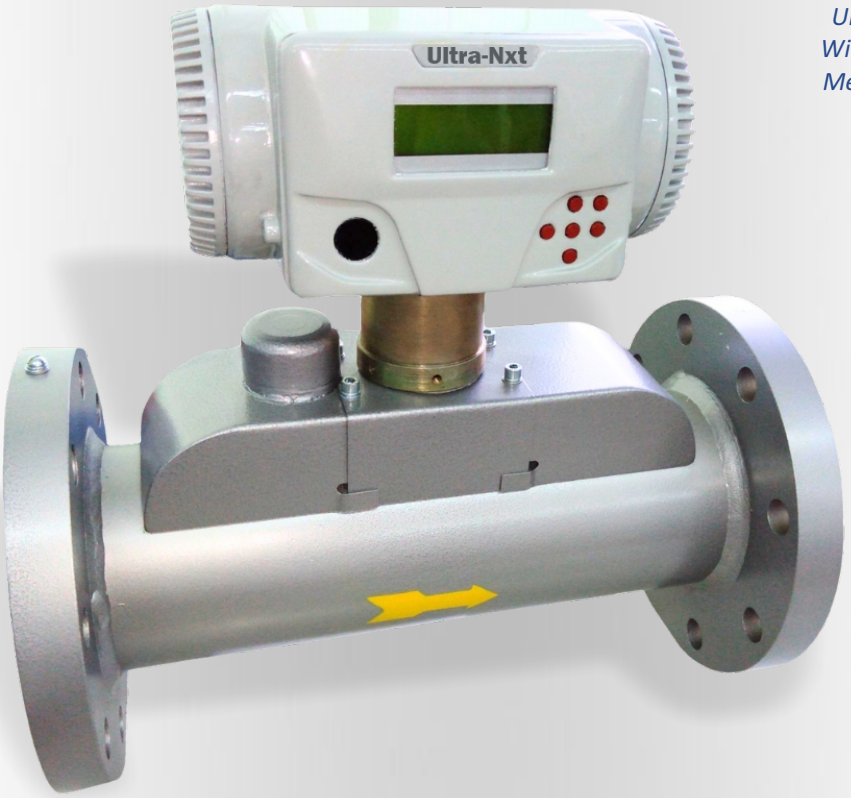

Ultra-Nxt – Providing You With The Perfect Gas Flow Meter For Any Application

Ultra-Nxt Gas Flow Meter

www.iotaflow.com

DESCRIPTION

Ultra-Nxt is an advanced ultrasonic-based device designed for precise gas flow and volume measurement, with capabilities to correct and measure temperature, pressure, and gas compressibility coefficient. It comes in both single and multi-beam flowmeter versions, catering to commercial and industrial markets. Ultra-Nxt competes effectively with large membrane, rotary, and turbine gas meters, offering a dynamic range of up to 1:400 and compact straight section lengths. The product line includes models such as Ultra-Nxt-A, Ultra-Nxt-B, Ultra-Nxt-C, and Ultra-Nxt-ET, covering gas meter sizes from G10 to G4000. The new 2024 models, Ultra-Nxt-ET (ideal for replacing rotary meters) and Ultra-Nxt-C (featuring vertical connections for household and utility markets), provide expanded capabilities.

FEATURES

Measures natural and petroleum gas volumes.

Automatic conversion to standard conditions.

High measurement accuracy: ±1.2% to ±2.3%.

Operates in -40°C to +60°C temperatures.

IP66 protection rating.

Resistant to up to 98% humidity.

Supports various gas meter sizes.

Logs events and alarms.

Explosion-proof design.

Long service life: ≥12 years.

ADDITIONAL FEATURES

Data Archiving

Supports hourly, daily, and monthly archiving of key parameters, with extensive storage capacity for emergency and change logs.

Interfaces

Multiple communication options, including RS-232, RS-485, and optical ports, with additional customization available.
Integrated Modem: Options for built-in or external GSM/3G modems, ensuring reliable data transmission even in challenging environments.

PRINCIPLE OF OPERATION

Ultra-Nxt flow meters operate by measuring the time difference between ultrasonic pulses traveling with and against the gas flow. This time difference is used to calculate the gas flow rate and volume, adjusted for temperature, pressure, and gas composition. The system is designed to be highly accurate, with a relative error margin as low as 0.05% under standard conditions.

APPLICATIONS

Housing and Public Utilities: Ultra-Nxt's silent operation and resistance to environmental factors make it ideal for residential areas.
Industrial Uses: Competes with traditional large gas meters in industrial settings, offering higher accuracy and lower maintenance.

MEASUREMENT PRINCIPLES

Ultrasonic Technology

Measures flow by detecting the time difference in ultrasonic pulse propagation, adjusted for temperature and pressure changes.

Calibration

Meters are calibrated using specific algorithms, ensuring accuracy in various conditions.

PRODUCT RANGE

The Ultra-Nxt product line covers a broad spectrum of applications, targeting both the commercial and industrial markets. The range includes:

Ultra-Nxt DN 32…150 G10…G400

Aimed at commercial markets, these models offer a dynamic range up to 1:400. They are compact with straight sections of 5 and 3Du and can be connected via coupling or flange.

Ultra-Nxt DN 50…300 G65…G4000

Targeted at industrial use, these models offer a dynamic range up to 1:200, with options for larger rotary and turbine gas meters. The connection is flanged according to GOST or ANSI standards.

New Models for 2024

Innovations include the Ultra-Nxt ET and C, designed to replace traditional rotary counters and membrane meters, respectively. These models offer compact dimensions, no requirement for straight sections, and advanced features like built-in modems.

TECHNICAL SPECIFICATIONS

• Measurement accuracy options	**±1.2% to ±2%**
• Pulse output	**0.01 m³ (G10-G40), 0.1 m³ (G65-G250)**
• Pressure measurement accuracy	**±0.4%**
• Temperature measurement accuracy	**±0.1%**
• Compressibility calculation error	**±0.5%**
• Overall error converting to standard conditions	**±1.5% to ±2.3%.**
• Operating temperature	**-40°C to +60°C.**
• Protection level	**IP66**
• Mechanical group	**N1**
• Relative humidity resistance	**up to 98% at 35°C**
• Magnetic field resistance	**400 A/m at 50 Hz**
• Maximum pressure	**1.6 MPa**
• Sensitivity	**≤0.33 Qmin**
• Pressure loss	**≤720 Pa (1:160, 1:200); ≤320 Pa (1:100, 1:20)**
• MTBF	**≥60,000 hours**
• Service life	**≥12 years**
• Explosion-proof	**1Ex ib IIB T4 Gb X**

TECHNOLOGICAL ADVANCEMENTS

The Ultra-Nxt 2024 series introduces several technological advancements

Expanded Dynamic Range

The ULTRA-NXT 2024 PRO upgrade expands the measurement range to 1:600, making it suitable for a wider array of industrial applications.

Improved Build Quality

New models feature increased dust and moisture protection, IP65 rating, and a modular design with multiple compartments for enhanced durability and ease of maintenance.

Communication Enhancements

Built-in GSM/3G modems and a unified optical port for external device connection ensure seamless integration into existing systems.

TECHNICAL PARAMETER

PARAMETER	VALUE
Relative Error of Volume Measurement (Ambient Temperature -40 to +60°C)	
-Option 1: Qmin to 0.05 Qmax; 0.05 Qmax to Qmax	± 1.7%; ± 0.75%
- Option 2: Qmin to 0.05 Qmax; 0.05 Qmax to Qmax	± 2%; ± 1%
- Option 3: Qmin to 0.05 Qmax; 0.05 Qmax to Qmax	± 1.2%; ± 0.75%
Relative Error of Pressure Measurement (Ambient Temperature -40 to +60°C)	± 0.4%
Relative Error of Gas Temperature Measurement (Ambient Temperature -40 to +60°C)	± 0.1%
Relative Error of Determining Correction Factor	± 0.5%
Relative Error of Converting Actual Volume of Gas to Standard Conditions (Ambient Temperature -40 to +60°C)	± 0.05%
- Option 1: Qmin to 0.05 Qmax; 0.05 Qmax to Qmax	± 2%; ± 1%
- Option 2: Qmin to 0.05 Qmax; 0.05 Qmax to Qmax	± 2.3%; ± 1.3%
- Option 3: Qmin to 0.05 Qmax; 0.05 Qmax to Qmax	± 1.5%; ± 1%
Protection from Environmental Influences (GOST 14254-96)	IP 66
Type of Explosion Protection	1Ex ib IIB T4 Gb X
Years of Average Service Life	Not less than 12 years
Mean Time Between Failures	Not less than 60,000 hr
Terms of Use	
- Ambient Air Temperature	-40 to +60°C
- Relative Humidity	Up to 95% at 35°C
- Atmosphere Pressure	84 to 106.7 kPa

DATA MANAGEMENT AND ARCHIVING

Comprehensive Archiving

Hourly, daily, and monthly archiving of key parameters, with a deep storage capacity for long-term data retention.

Emergency and Change Archives

The system records emergency situations and changes with time and date stamps, providing a clear audit trail for troubleshooting and analysis.

INSTALLATION AND MAINTENANCE

Ultra-Nxt flow meters are designed with ease of installation in mind:

Straight Sections

Installation requires straight sections at both the inlet and outlet to ensure accurate measurements. The use of welded pipes is prohibited to maintain the integrity of the system.

Compatibility with Existing Infrastructure
The compact design and versatile connection options allow easy integration with existing pipelines, minimizing the need for extensive modifications.

Maintenance Features
The modular design allows for easy access to internal components, and regular software updates ensure that the system remains state-of-the-art.

COMPETITIVE ADVANTAGES

Ultra-Nxt systems offer several key advantages over traditional gas meters:

Wider Measurement Range
The ability to measure across a broader dynamic range allows for more versatile applications.

Lower Operational Costs
Integration of a corrector into the flow meter reduces overall system costs.

Silent Operation
Essential for installations in residential areas where noise levels must be minimized.

High Resistance to Environmental Factors
Ensures consistent performance even under challenging conditions, reducing maintenance and downtime.

OVERALL DIMENSIONS OF THE 'SENIOR' LINE

Size Type	DN (mm)	D (mm)	D1 (mm)	n×d (pcs/mm)	d1 (mm)	N (mm)	L (mm)	B (mm)	Max Working Pressure (Mpa)	Weight (kg)
G65, G100	50	–	–	–	–	–	–	–	–	–
G160, G250, G400	80	195	160	8 × 18	14	380	500 ± 2	300	1.6	50
G250	100	215	180	8 × 18	14	390	500 ± 2	300	1.6	60
G400, G650, G1000	100, 150	280	240	8 × 22	14	440	550 ± 2	360	1.6	70
G1000	150	335	295	12 × 22	14	500	700 ± 2	520	1.6	110
G1600, G2500	200	460	410	12 × 26	14	800	1000 ± 2	650	1.6	250

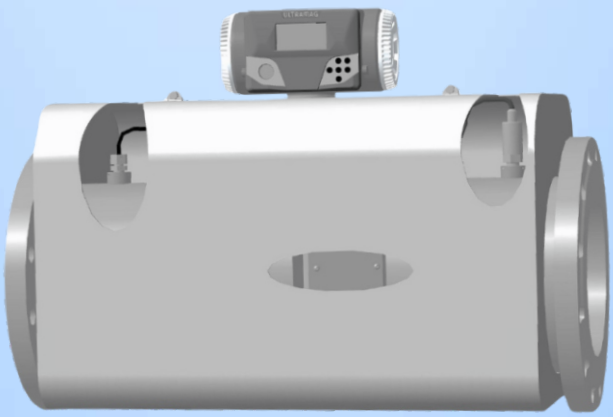

Ultra-Nxt device "senior" line

OVERALL DIMENSIONS OF THE 'JUNIOR' LINE

Size Designation	DN (mm)	Threaded G	Flange (mm)	H (mm)	B (mm)	L (mm)	D1 (mm)	Weight (kg)
G10	32, 40	G2"	–	–	–	–	–	–
G16, G25	40	–	–	225	150	320	–	17
G16, G25, G40, G65, G100	50	G2½”	50	225	150	320	–	17
G65, G100, G160, G250	80	–	–	195	255	380	160	21
G100, G160, G250, G400	100	–	–	215	275	380	180	25
G1600, G2500	150	–	–	–	380	380	–	35

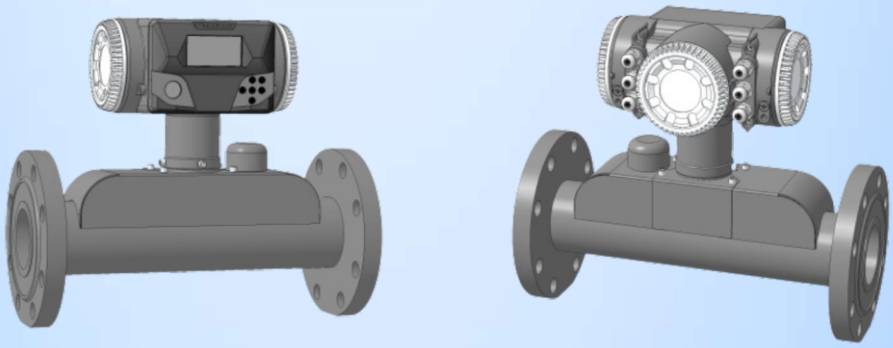

Ultra-Nxt device "junior” line

EXPLOSION-PROOFNESS

Safety Standards

Emphasize Ultra-Nxt’s compliance with stringent explosion protection standards, specifically the 1Ex ib IIB T4 Gb X rating, ensuring safe operation in hazardous environments.

Application Areas

Discuss the suitability of Ultra-Nxt systems in industries where explosion risks are significant, such as oil and gas.

INTENDED USE

Preparation for Use

Before installation, it is essential to visually inspect the Ultra-Nxt system to ensure it is properly sealed and grounded. Installation requires positioning the system on the gas pipeline with specified straight sections (5 DN inlet and 3 DN outlet) to maintain measurement accuracy. After installation, the system should be pressurized slowly, and all connections checked for leaks to prevent safety hazards and ensure operational integrity.

System Use

Only trained personnel are authorized to operate the Ultra-Nxt system, ensuring that it is handled correctly and safely. In case of any gas odor detection, immediate action should be taken to shut off the gas supply and contact emergency services, emphasizing the importance of safety in gas handling operations.

SYSTEM ARRANGEMENT

The Ultra-Nxt system is composed of several key components, each playing a vital role in its functionality

Measuring and Computing Unit (MCU)
Equipped with a display, keyboard, and power supply, the MCU processes data and provides user interaction.

Ultrasonic Flow Transducer (USTF)
The core sensor that measures gas flow using ultrasonic technology.

Pressure Transducer (PT)
Measures the gas pressure within the system, providing data for accurate volume calculations.

Temperature Transducer (TT)
Monitors gas temperature, enabling compensation for thermal effects on gas volume.

FUTURE-PROOFING

The Ultra-Nxt 2024 series is designed with future needs in mind:

Scalable Design
The modular architecture allows for easy upgrades as technology evolves, ensuring that the system remains relevant for years to come.

Advanced Communication Interfaces
The inclusion of modern communication options like GSM/3G ensures that the system can integrate with emerging smart grid technologies and IoT systems.

Why Choose Ultra-Nxt

- **High Accuracy:** Delivers precise measurements with up to ±1.2% accuracy.
- **Reliability:** Offers a long service life of over 12 years and high MTBF of ≥60,000 hours.
- **Safety:** Explosion-proof design and IP66 protection ensure safe operation in hazardous environments.

Ultra-Nxt provides superior accuracy, dependable performance, and robust safety features, making it ideal for demanding applications.

Contact Us
IOTAFLOW SYSTEMS PVT. LTD.
C-2/13, Mayapuri Industrial Area Phase-II,
New Delhi - 110064 (INDIA)
+91-9910693866 / +91-7982674054
contact@iotaflow.com

Specifications subject to change without prior notice. © Iotaflow Systems Pvt. Ltd.